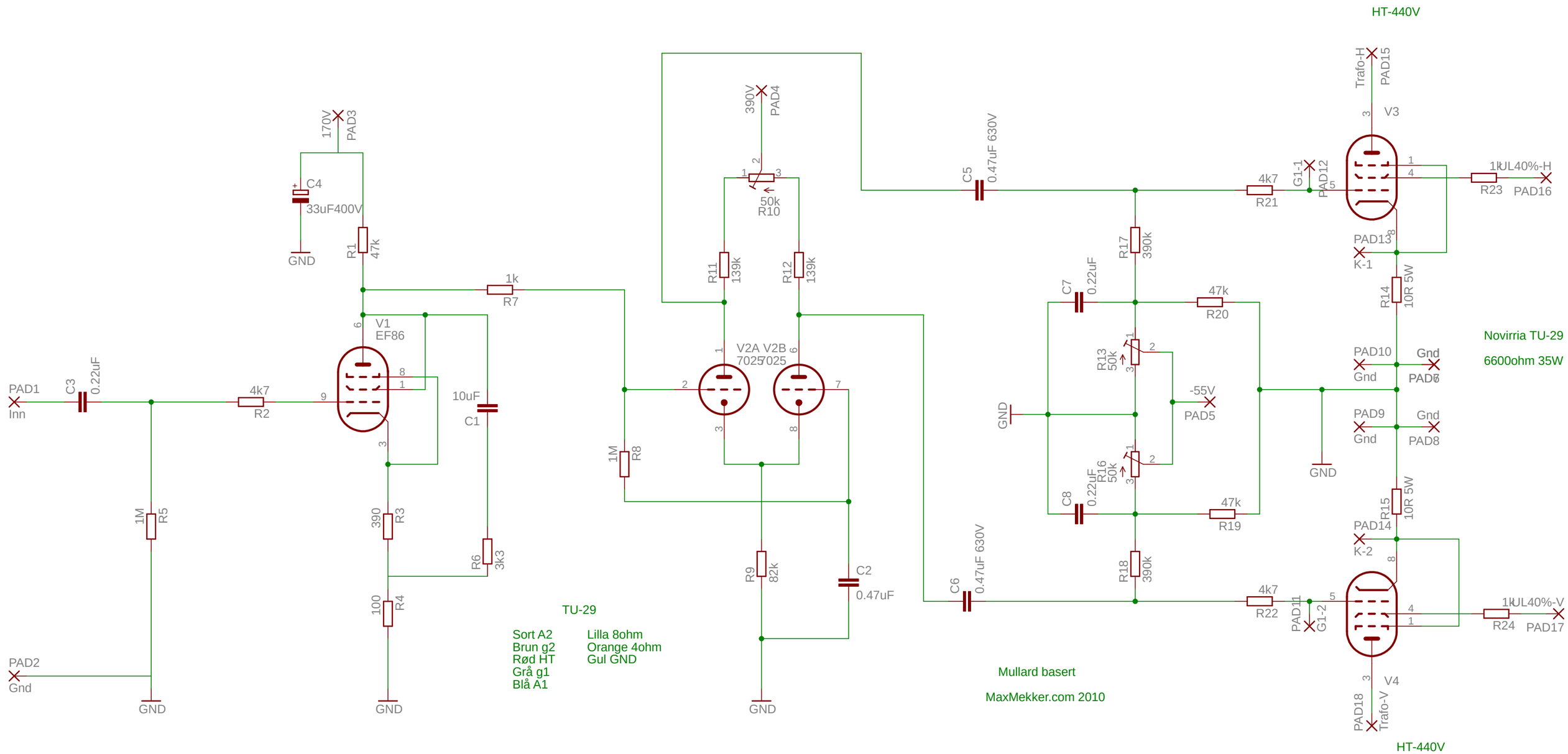
HT-440V
Trafo-H
PAD15
V3
390V
PAD4
170V
PAD3
C4
33uF400V
GND
R1
47k
1k
R7
V1
EF86
PAD1
Inn
C3
0.22uF
4k7
R2
10uF
C1
1M
R5
390
R3
3k3
R6
100
R4
PAD2
Gnd
GND
50k
R10
R11
139k
R12
139k
V2A V2B
7025 7025
1M
R8
R9
82k
C2
0.47uF
C5
0.47uF 630V
4k7
R21
G1-1
PAD12
1k
UL40%-H
R23
PAD16
PAD13
K-1
R14
10R 5W
R17
390k
C7
0.22uF
47k
R20
R13
50k
-55V
PAD5
PAD10
Gnd
PAD7
PAD9
Gnd
PAD8
R16
50k
C8
0.22uF
47k
R19
R18
390k
R15
10R 5W
PAD14
K-2
C6
0.47uF 630V
4k7
R22
PAD11
G1-2
1k
UL40%-V
R24
PAD17
V4
PAD18
Trafo-V
HT-440V
Novirria TU-29
6600ohm 35W
TU-29
Sort A2
Brun g2
Rød HT
Grå g1
Blå A1
Lilla 8ohm
Orange 4ohm
Gul GND
Mullard basert
MaxMekker.com 2010